OVAL TRAY RACKS

- 2" H x 4" W Aluminum slides; welded to frame
- Holds 22" x 26⅞" oval trays
- Heavy-duty 5" swivel stem casters (CHV)
- All aluminum – WILL NOT RUST
- All welded rack, reinforced gusset corners; ships LTL

NSF

LUGCT10-OTR

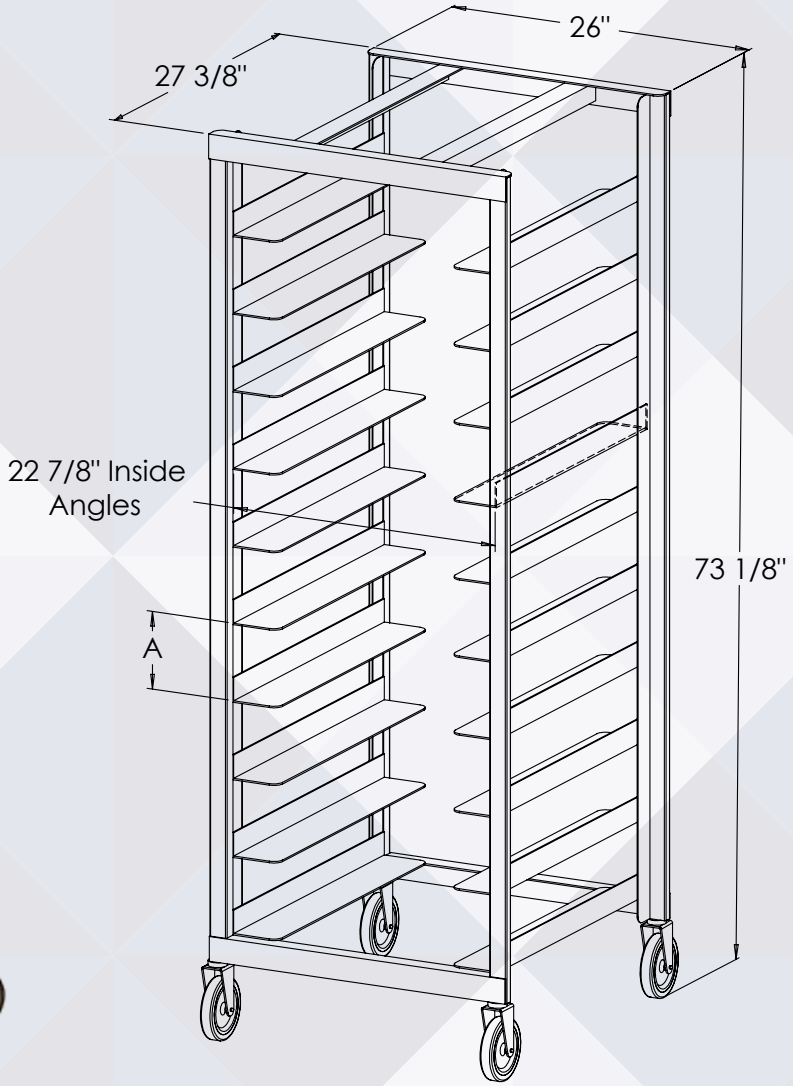

Oval Tray Racks				
Model Number	**Tray Capacity**	**Size W x H x D**	**"I.D." Width**	**Shelf Spacing**
LUGCT12-OTR	12	26" x 73⅛" x 27⅜"	22⅞"	5"
LUGCT10-OTR	10	26" x 73⅛" x 27⅜"	22⅞"	6"

Options: CHL, PS – see page 82 for details