PediaPals

600026 HOME CARE BED WOODEN SIDE
USER MANUAL

MOTORISED HOME CARE PATIENT BED

CE

600026

REF

FR.KG. 33/00/05.08.2021

PediaPals

Contents

PediaPals

1. INTRODUCTION

Theuse of theelectricpatientbedusedforadults, cleaning, technicalinformation, productiondesign in accordancewithstandardsandregulations, andtheuse of theproduct is not affectedbyany risk andproductperformance.

2. PRODUCT DESCRIPTION

NHB 7000 Models is an electricpatientbedwith 4th motorisedback, foot, heightandTrendelenburgmovementfunctionsdesignedforsafetreatment of thepatient. Thebed can takeFowlerVascularpositions.

600026 Modelsaredesignedbased on maximumsafetyandmobility. 600026 models, whicharedesignedbytakingintoaccountthephysicaldisabilitiesandcomfort of thepatient, maximisethecomfort of patients in thehigh risk group in every sense.

600026 Model electricpatientbedsaredesigned in accordancewithinternationalstandards. Thus, highperformance is provided. Thepatient'sfall, jamming, etc. Thedesign has beencarriedoutbyminimisingthenegativitiesthatmayoccuragainstrisks.

3. SAFETY AND WARNING

3.1. SafetyandWarningInstructions

- Followtheinstructionscarefullyand, ifnecessary, keep a copy of theinstructionsclosetothebed.
- Toavoidcustomerdamageandtoobtainthebestperformancefromtheproduct, thisusermanualmust be readbeforeuse.
- Usethecorrectmainssupplyforthebed
- Make sure thatthebed is operatedbyqualifiedpersonnel
- Toeliminatethe risk of electricshock, existingelectricalmedicalequipmentmayonly be connectedto a supply network withprotectiveearthing.
- Ifthepowersupplycablesare not handledproperly, there is a danger of tangling, cuttingorothermechanicaldamage.
- Whilethepatientbedfunctionsare in motion, thecablesmay be pinched, so do not performanyfunctionality on thebedbygettingtechnicalsupport in case of saggingcables.
- Do not interferewiththebedwhilethefunctions of thepatientbedare in motion, it poses a dangerduetolimbentrapment of fingers, head, etc. throughexistinggaps.
- Do not useanyothermattressotherthanthe 860x1950x12 mm 32 densitymattressusedbythemanufacturer. Dangerssuch as fallingandjammingoccurduetomattressdimensions.
- Thedistancebetweenthe top surface of thesiderailandthe top surface of thematttressshould be at least***220mm*** whenthesiderail is locked.
- Topreventdamagetothe POWER SUPPLY CORD, wrapthe POWER SUPPLY CORD aroundthecablewindermechanismthatkeepsthe POWER SUPPLY CORD awayfromanymovingpartsormechanisms of the PATIENT BEDwhenthe PATIENT BED is beingused, transportedor not in use.
- Lift thepatientbedmax. to a height of **750 mm** fromthefloor.
- Do not apply a load of morethan**175 kg** tothepatientbed.
- Onlyoriginalsparepartsanddamagedpartsshould be replacedimmediatelyandpartsshould be replacedbyqualifiedpersonnel
- Do not overloadthebedbeyonditscarryingcapacity.
- Ifyounoticethatthebeddoes not fulfilitsfunctions, do not usethebedandinformthetechnical service.
- Informthepatientandotherusersabouttheoperatingfunctions.
- Thepatientbedshould be usedindoors (wards, observationrooms, etc.).
- Incase of anyelectricalandmechanicalproblems in thepatientbed, interventiontothebedshould be carriedoutbytrainedpersonnel. Ifnecessary, themanufacturer'stechnical service unitshould be informedandsupportshould be obtained.
- Duringthedelivery of thepatientbed, trainingshould be requestedfromthemanufacturerforproductuseandintervention in case of anymalfunction.
- Detailedtechnicalinformationabouttheepatientbedshould be requestedifnecessary.
- Thesafeoperatingweightmustnever be exceeded. Ifthesafeoperatingweightmust be exceeded, thesurface on whichthepatientliesmust be kept in itslowestpositionandthefunctions of thebedmust not be used.
- The 2nd personshould not sit on thebedwhilethepatient is lyingdown.
- Toreducethe risk of injuryfromfallingoffthebedwhenthepatient is leftalone, thebedshould be raisedwhen it is at thebottom.
- No othernon-productionindependentmechanismshould be connectedtothepatientbed.

- Incase of anymalfunction, it should not interveneexceptfortheauthorisedtechnical service.
- Thebedmustnever be usedbymorethanonepatient at thesame time.
- Whensettingthebed in thedesiredposition, thecondition of thepatientandthebedenvironmentshould be takenintoaccount.
- Alwaysunplugthepowercordbeforecleaningorreplacinganypart of thebed.
- Deliver thedefective motor, plastic, etc. materialsused in thepatientbedtothemanufacturerorlicensedwastecompany in terms of environmentalprotection.
- Deliver thepackagingmaterialssuch as cardboard, nylon, etc. used in productpackagingtothelicensedorganisationormanufacturercompanyforenvironmentalprotection.
- Thepatientorcarer is definitely in dangerif
    - Whenthepowercable is damaged
    - Whenmovingthebedfromoneplacetoanotherwhenthefloorandbedsurroundingsareunreliable.
    - Impropermaintenance (e.g. automaticwashingorwashingwithpressurisedwater)
    - Whenthesafeworkingweight is exceeded.
- Onlysparepartssuppliedby an authorised workshop should be used. Ifsparepartssuppliedbyothersuppliersareused, thebedframemanufacturerdoes not acceptanyresponsibilityforanydamage, lossorinjury.
- Thepatientbedshould be wipedwith a dampclothwith a cleaninganddisinfectionsolutionwithwater at roomtemperature.

---

4. SYMBOLS AND LABELS ON THE PRODUCT

	Protectionagainstaccidentsduetoelectricity type B		Bedload 220 kg
	CE marking		IEC 60417-5019 / Earthing
	Accompanyingdocuments		Suitableforindooruse.
	Read theusermanual		General WarningSign
	Equipotentiality	CPR	CPR
	Safe payload:220 kg	DİKKAT	Entrapmenthazard
	Maximum patientload: 175 kg		Labelusedwhereremovablepartsexceed 20 kg
	Beddimensionalhazard, readtheoperatinginstructions, siderailfunctionalhazardandcautionsymbols		Companycontactinformation, barcodenumber, product model, serialnumber, productiondate, labelwithmedicaldeviceclass

Ifyouseethatany of thelabels on theproduct is missing, pleaserequest it fromthemanufacturer.
WARNING

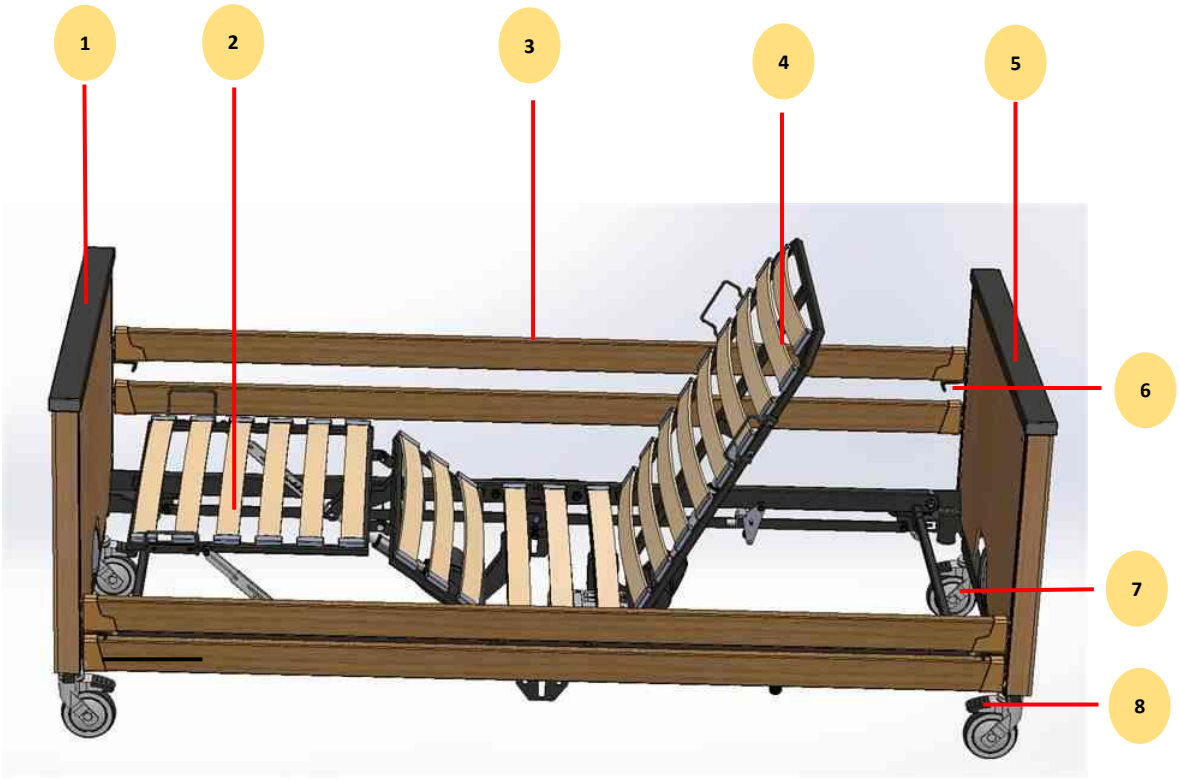

1	FootEndPanel
2	Foot platform
3	Side Railing
4	Back Platform
5	HeadEnd Panel
6	Side railingopeningandclosinglatch
7	Ø125 Wheel
8	Brake Pedal

5. AREA AND CONDITIONS OF USE

Patientbeds; It is designedforthetreatment of adultsaccordingtousageareassuch as hospitals, homesandclosedenvironmentswheremedicalinterventionsareperformed. Using patientbedsoutside of theinstructionsforuse can causeseriousinjuriesandposes a danger.

Thepatientbedincludesallparts of thepatientbedaccessibletothepatient, eveniftheparttowhichthepatientbed is applied is underthemattresssupport platform.

Usethepatientbed in theareasapprovedbythemanufacturerandaccordingtotheproductionpurpose.

WARNING

Theuse of thepatientbedmaypose a hazarddepending on temperatureandhumidity. Usethebed in thefollowingenvironments. TemperatureRange -10°C to +40°C

- Relativehumiditybetween 30 and 75
- Thebed is intendedforuse inside roomsformedicalpurposes. Electricalinstallationsmustthereforemeetcompliancewithlocalconnections.

6. APPLIED STANDARDS AND REGULATIONS

Thepatientbedcomplieswiththefollowingstandardsanddirectives.

- TS EN ISO 14971
- 93/42/EEC Replacedby MDR 2017/745 EU
- AT DECLARATION OF CONFORMITY

6.1. CompliancewithStandards

Ourpatientbed, whichweproducewithintheframework of internationalstandards, keepshighperformance, ergonomicandsafety at thehighestlevel.

Examples of patiententrapment in thepatientbedandthemeasurestaken in thisdirection;

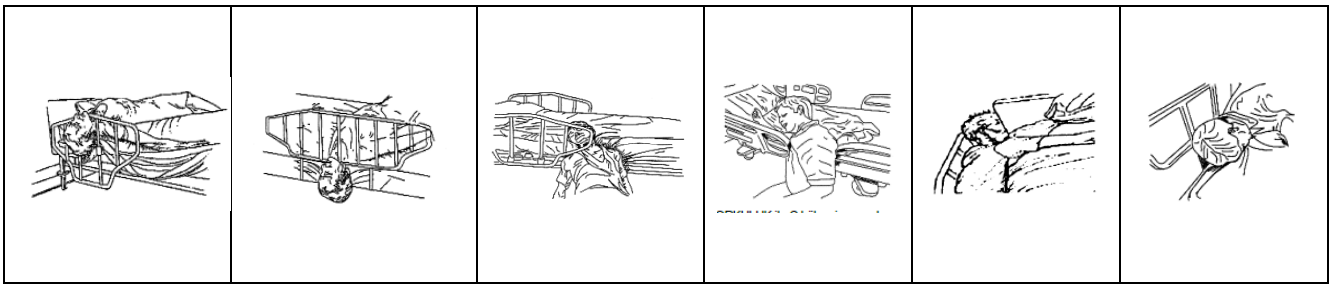

6.2. GapDistances

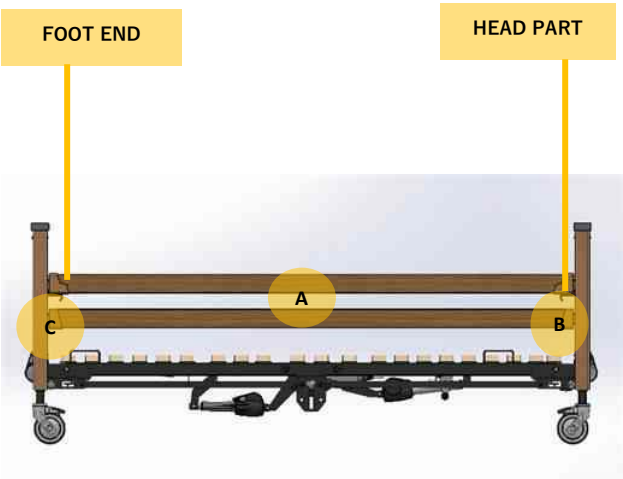

REGION	VALUE
A	≤ 120 mm
B	≤ 60 mm
C	≤ 60mm Or> 318 mm

6.3. JammingDistances

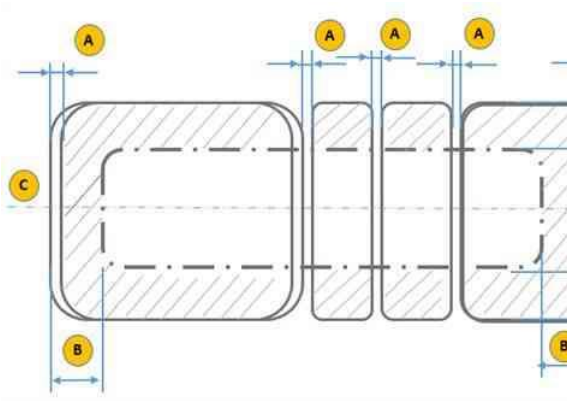

REGION	VALUE
A	Thegapbetweenmovingpartsmust be lessthan 8 mm (nogap) ormorethan 25 mm.
B	Thehatchedarearepresentstheaccessedimpingementzoneforthefingers 200 mm fromtheoutersurface.
C	BEDSIDE PANEL
D	FOOTPAD PANEL

6.4. FootImpingementDistance

Description
Forthezonewheredimension "b" is lessthanorequalto 130 mm, dimension "a" is alwaysgreaterthanorequalto 120 mm.

. Description
Forthezonewheredimension "b" is between 130 mm and 180 mm, dimension "c" is alwaysgreaterthanorequalto 50 mm

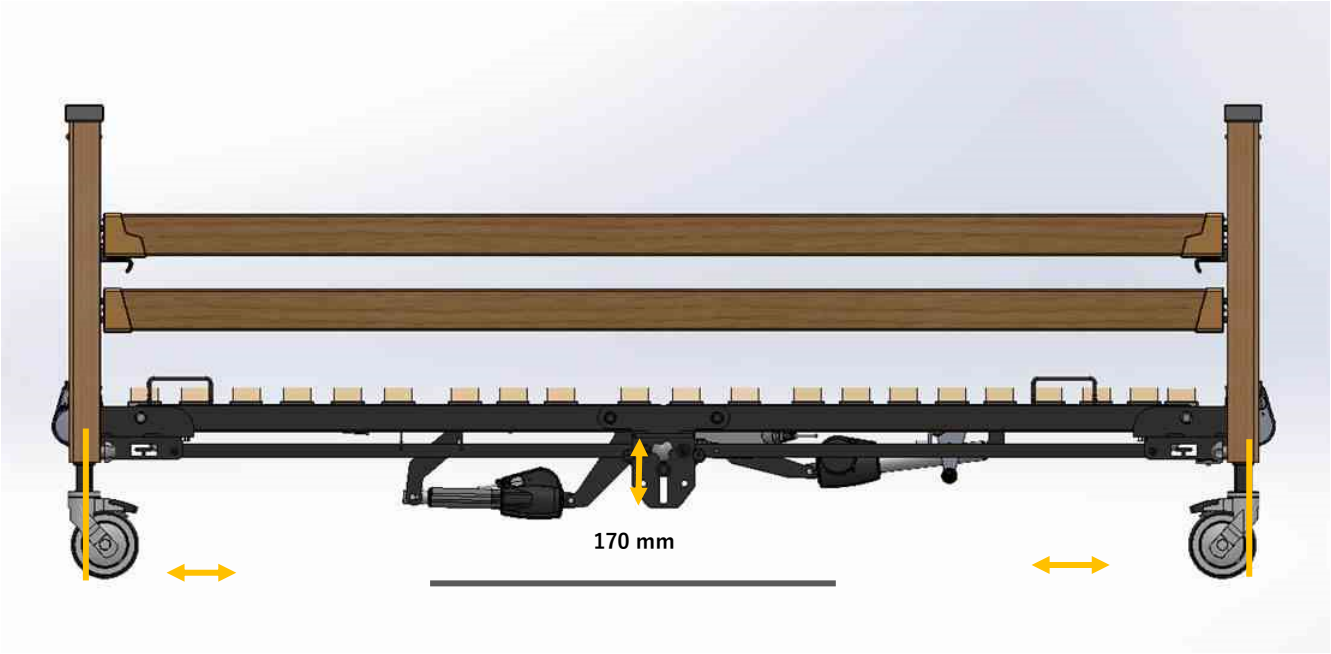

6.5. BalanceandSafeWorkingLoad

Staticloads of **175 kg** appliedtothepatientbedareappliedtotheareasrequiredbythestandard as shown in thefigurebelowandthestability of thepatientbed is tested.
Safecarryingcapacity of thepatientbed is **175 kg**.
Static carrying capacity is **350 kg.**

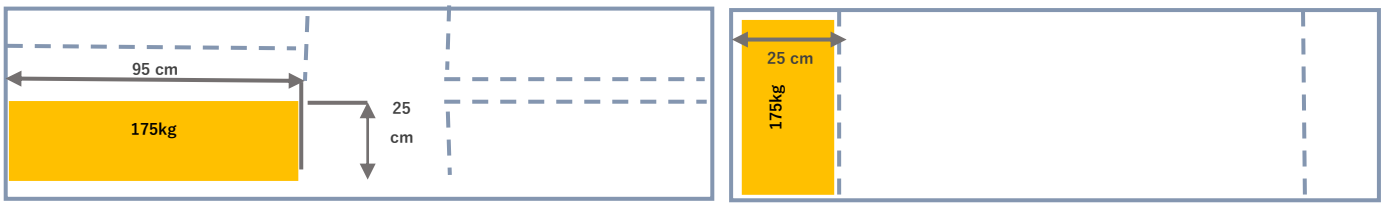

The SAFE OPERATING LOAD of the BED LIFT must be at least**1750 N**. Thisload is accepted as thesum of thefollowing minimum loads.

- 1350 N, correspondingto a mass of approximately**135 kg** forthe PATIENT,
- 200 N, correspondingto a mass of approximately**20 kg** forthemattress,
- 150 N, correspondingto a mass of approximately**15 kg** forthe SAFE WORKING LOAD supportedbythese ACCESSORIES, excluding ACCESSORIES and PATIENT mass.
- 500 N, correspondingto a mass of approximately**50 kg** forthosesections of the PATIENT BEDdesignedto be liftedbythe BED LIFT,

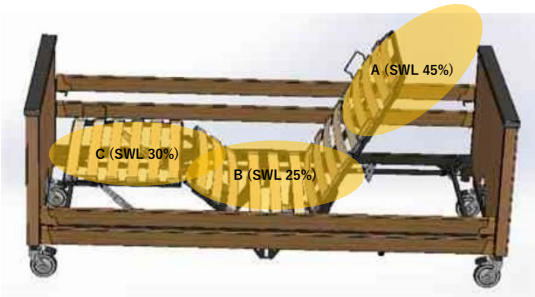

REGION	VALUE
A	45% OF THE SAFE WORKING LOAD OF THE BACK SECTION
B	25 % OF THE SEATING SECTION SAFE WORKING LOAD
C	30% OF THE LEG SECTION SAFE WORKING LOAD
SWL	SAFE WORKING LOAD

6.6. DistanceBetweenMattressand Side Railing

Positiveresultsareobtained in caseswherethedistancebetweenthemattresssupport platform andthesiderailingdoes not exceed**50%** of the**120mm-60 mm** conicalgauge.
A force of **250 N** is appliedtothe**60 mm** cylindricalend of theconicaltool in themostunfavourabledirection. Thelargeend of theconicaltoolmust not sinkbelowthemattresssurfacebymorethan**50 % ormorethan 120 mm** in diameter.

6.7. Fall Protection

Patientbedsiderailsandmattress top surfacearedesignedwith minimum heightrules. Inthisway, the risk of thepatientfalling is minimisedbymaking a risk assessmentandthedesign is carriedout in accordancewiththestandards.

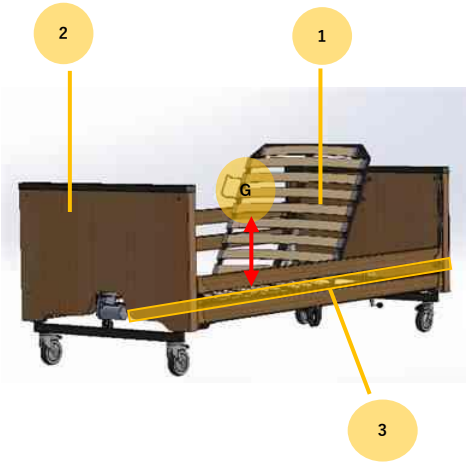

REGION	VALUE
1	BEDSIDE PANEL
2	FOOTPAD PANEL
3	SHEET
G	≥ 220 mm

6.8. Side RailingStrength

Forcesareappliedtothesiderails in accordancewith EN 60601-2-52 standard.

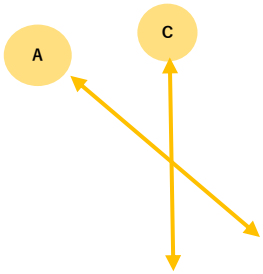

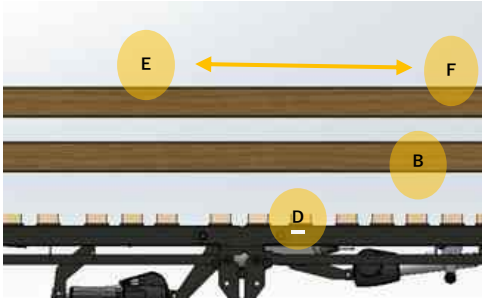

REGION	APPLIED FORCE
A	500 N
B	500 N
C	750 N
D	750 N
E	500 N
F	500 N

6.9. AngularMovements

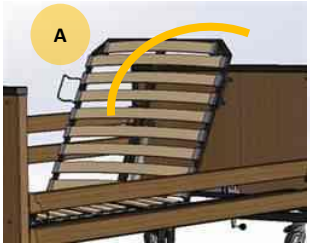

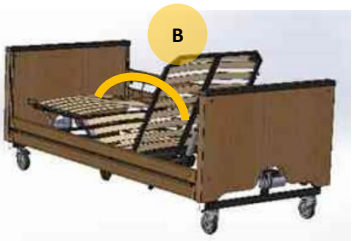

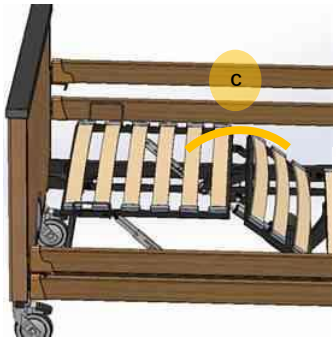

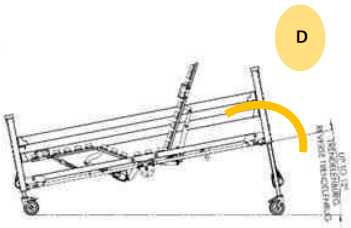

REGION	ANGLE
A (Anglebetweenthebackrestandthelevelplane)	0° -75°
B (Thejointpoint of thelinedrawnbetweenthebackrestsectionandthesection/sittingsection wherethelowerpart of theleg is placedandthesection/sittingsectionwheretheupperpart of theleg is	Min 90°
C **The**angle B betweenthe horizontal planeandthelinedrawnbetweenthepoint of articulation of thebackrestsection/seatingsectionandthepoint of articulation of theupperlegsection/lowerlegsection is at leastbetween 0° and 12° .	0° -32°
D (Trendelenburgangle) must be adjustable	Min 12°

7. SYMBOLS RELATED TO CONTROL TOOLS AND PERFORMANCE

	Downwardfunction of thebacksection 			Upwardfunction of thebacksection 

	Upwardfunction of thelegsection 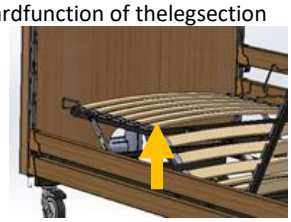		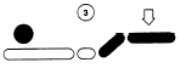	Downwardfunction of thelegsection 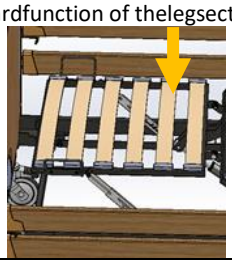
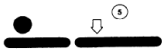	Downwardstraightpositionmovementfunction 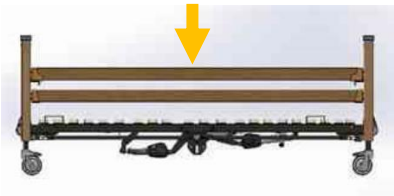		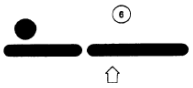	Upwardstraightpositionmovementfunction 
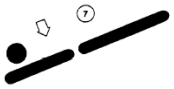	Reversetrendelenburg 			Straighttrendelenburg 

8. THE PURPOSE AND INSTALLATION OF THE PATIENT BED

8.1. Transfer

Considerationsfor a safe transport;

- Make sure thatnocablesareconnecteddduringthe transfer.
- Make sure thatthepowercable is wrappedaroundthehook at thebedside of thepatientbed
- Make sure thatthewheelsarelockedwhenloadingandunloading
- Transport thebed on a suitablesurface.
- Checkthatthebrakesare on during transport.
- Removeanyaccessoriesthatmayfalloffduringmovement.

Do not forgettodisconnectthepowercordfromthesocketbeforetransportingthepatientbed.

ATTENTION

PediaPals

8.2. Installation and Assembly

Adjustthebed as follows

- Thefollowingrulesmust be followedduringtheinstallation of thebed.
- Pleaserefertothescope of deliveryandbedvariants.
- Attachtheaccessoriesaccordingly.
- Make sure thattheground is suitableduringtheinstallationprocess.
- Make sure thattheconnectioncablesareinsertedintothecorrectsockets.
- Checktheearthingcables.
- Deliver thedismantledpackagingtothenecessaryplacesforenvironmentalhealth.

Product Folding;

Pleaseact in accordancewiththeinstructions in order not tocauselimbentrapmentduringproductfolding.

ATTENTION

1. **Step:**

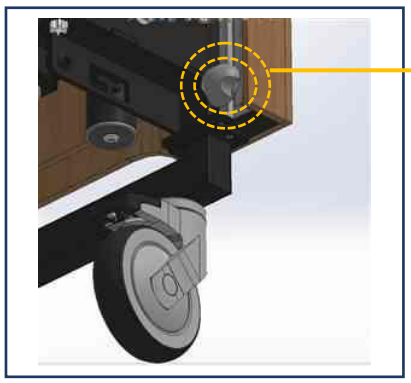

Removethehandlebyturning it anti-clockwise.

2. **Step:**

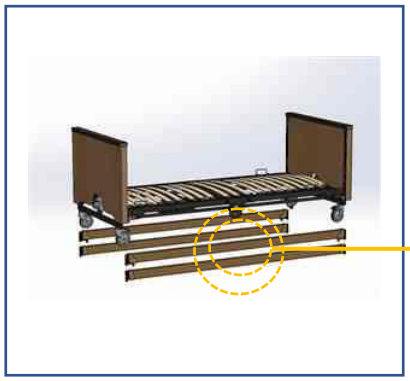

Afterremovingthehandle, removethesiderails.

3. **Step:**

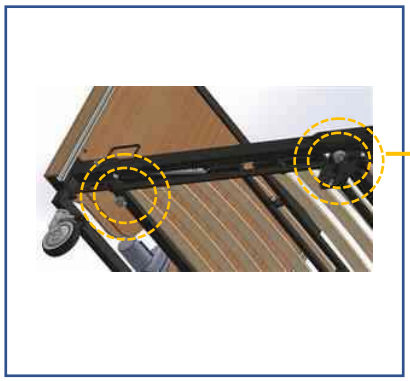

Afterperforming step 2, removethehandles at themarkedpoints.

4. Step:

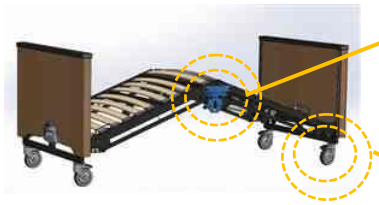

Duringthefoldingprocess, hold on tothearea marked in red, theremay be a risk of limbentrapmentduetomovingparts.

Foldfromtheemptybrakepartbyactivatingthebrakesystem of any of thewheelsfromthepartswheretheheadorfootpanelsarelocated.

5. Step:

Afterfolding, fixany of theremovedhandlestothemarkedplacebyturningclockwise.

Reassemblethebedbyfollowingth estepsabove in reverseorder.

NOTE: *Ifany problem is encountereddduringtheinstallation of thepatientbed, theinterventionshould be carriedoutby PEDIA PALS technical service personnel.*

Caution Risk of injury

Duringinstallation, installmovingaccessorieslast, as there is a risk of injuryfromfalling.
Wheninstallingtheelectricalsystem, checkthecablesandinstallthem. Anydeformation of thecablesposes a risk of electricshock.
Ensurethatthemainssupply is disconnectedduringbedassemblyEnsurethatthecastorsarelockedbeforeassembly
Installation of thepatientbedshould be carriedoutbytechnical service personnelortrainedhospitalpersonnel

9. TRANSPORT OF THE PATIENT

9.1 ConsiderationsforPatient Transport

Make sure thatthepatientbed is in theappropriateposition.

- Make sure thatnocablesareconnectedduringthe transfer.
- Make sure thatthepowercable is wrappedaroundthehook at thebedside of thepatientbed
- Make sure thatthewheelsarelockedwhenloadingandunloading
- Transport thebed on a suitablesurface.
- Checkthatthebrakesare on during transport.
- Removeanyaccessoriesthatmayfalloffduringmovement.
- Make sure thepatient is in thecentre of thebed.
- Make sure thatthesiderailsareabove.
- Keepthebed at thelowestlevel.

---

10. OPERATION

10.1. Initial Start-up

Preparethebed as follows;

-Checktheelectricalconnectionpoints (socketinputs) beforeinsertingthe plug of themattress intothesocket outlet.

-Checktheconnections of thegrounding cables.

-Checktheinsulation of theconnection cables. Checkforanydeformationorcrushing.

-Checkthewheels andalsocheckthefunction of thebrakesystemwheels.

- Plug thepowercableintothesocketforpowersupply. Make sure thepower is switched on

-Operateandchecktheback , foot, heightandotherfunctionmotors.

-Check thecontrol .

-Checkthefunction of theside rails.

---

11. ELECTRICAL SYSTEM AND CONTROL ELEMENTS

11.1 ElectricalSystem

Thepatientbed has a controlbox, foot motor, back motor, calfmovement, height motor andhandcontrol. As a workingprinciple, thesystemconsists of thecontrolboxreceivingthe data andperformingthefunctions of thefunctionswiththecommandprocessgivenfromthehandcontrol. MotorsBelow is theconnectiondiagram of thesystem. Safetyrulesmust be followedduringconnection. Read theinstructionscarefully in thisregard. Read theelectricalinformation on theproductlabel. Thecomponentsandstructure of 600026 modelsaredesigned in accordancewithsafetyrules.
Themodelshave IPX4 / IPX6 degree of protection.

WARNINGElectricalinterventionshould be carriedoutbyauthorisedandtrainedpersonnelandsupportshould be obtainedfromthemanufacturerwhennecessary.

CAUTION: Do not touchthecontrolbox, motor andcableswhenthebed is in operation.

CAUTION: Ifthepatientbed is connectedto an off-grid powersupply, checktheperiodicchecks of thepowersupplyand seeinstructions.

CAUTION: Electricalinterventionmust be carriedoutbytrainedpersonnel. Accidentsduetoelectricshockmayoccur.

ElectricalSystem Connection Diagram

ÖGE	PARÇA NO	ADET
1	CA4 KONTROL KUTUSU J11332	1
2	009914948-1700-B	4
3	J20801 LINAK SIRT MOTORU	1
4	J01411 LINAK YUKSEKLIK	2
5	J20800 LINAK AYAK	1
6	J14051 HB850200130004	1
7	SML912263	1

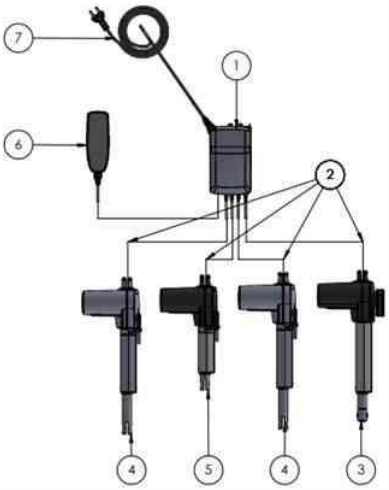

ELECTRICAL PROPERTIES

COMPONENT	MANUFACTURER / BRAND	TECHNICAL INFO
FOOT MOTOR	LINAK	IMPORTAL / 6000 N / DC / IPX4 / IPX6 / 24V / Max. 5.0 A
BACK MOTOR	LINAK	IMPORTAL / 3500 N 4500 N / DC / IPX4 / IPX6 / 24 V / Max. 3.5 A
HEIGHT MOTOR	LINAK	IMPORTAL / 6000 N / DC / IPX4 / IPX6 24V / Max. 5.0 A
CONTROL BOX	LINAK	IMPORT /100-240 V ~ / 50/60 Hz / Max. 5 A / IPX6
HAND CONTROL	LINAK	IPX4 IPX6

11.2. MovementFunctions of thePatientBed

Thepatientbedperformsbackangularmovement, footangularmovement, heightandtrendelenburgmovementswiththehelp of an electric motor bygiving a commandfromthehandcontrol. Inthefootsection, thefootsection is manuallymovedfromtheangularpositiontotheparallelpositionbymeans of a 5-stage ratchet. The CPR arm on thepatientbedalsofulfilsitsfunctionmanually.
Thesiderails on thepatientbedfulfiltheirfunctionsmanuallywiththehelp of thelockmechanism.

Dangers of injurywhenperformingthemovementfunction of thepatientbed

ATTENTION

Make sure thattherearenо body partsbetweenthepatientbed platform. Whenadjustingthepositions of thepatientbed, stayawayfrompinchpoints. Do not movethepatientbedbeyondthesafeload.

Model-dependentcontrolelements;

- Wheel

11.2.1. Hand Control

Thebed is designedformovementcontrol. It is connectedwith a flexiblecableand can be easilyusedbythecarerandthepatient in anyposition. Detailedfunctionmovementsaregiven in **Article 7**.

11.2.2. Side Railing

Pullthesideraillatchesinwardsandpressdownslightly on thesiderail.

WHEN THE SIDE RAILING IS LIFTED DIRECTLY UPWARDS, IT COMES TO THE CLOSED FUNCTION.

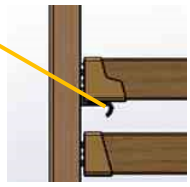

11.2.3. BrakeSystem

Brakesystem: Designedusingthepedals on thewheel.

11.2.4 Brake Pedal

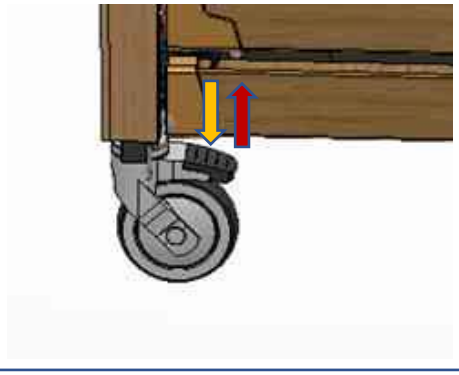

WHEN THE BRAKING PEDAL ON THESE WHEELS IS PRESSED DOWNWARDS, THE BRAKE IS ACTIVATED. WHEN THE PEDAL IS MOVED UPWARDS, THE BRAKES BECOME INACTIVE.

11.2.5. Foot Platform AngularMovement (RatchetMovement)

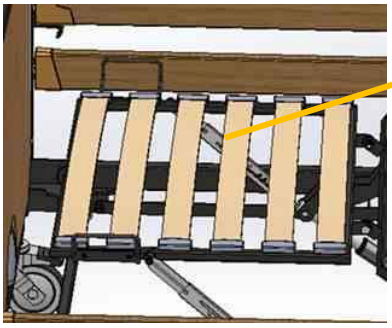

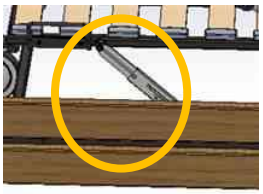

FOOT PLATFORM ANGULAR MOVEMENT IS REALISED GRADUALLY WITH THE HELP OF CIRCIR. WHEN YOU LIFT THE PLATFORM UPWARDS, ANGULAR MOVEMENT OCCURS GRADUALLY BY MOVING THE CIRCIR. TO MOVE THE PLATFORM DOWNWARDS, THE CIRCIR IS MOVED TO THE TOP POSITION AND THEN THE PLATFORM IS RELEASED FREELY.

12. TECHNICAL DIMENSIONS

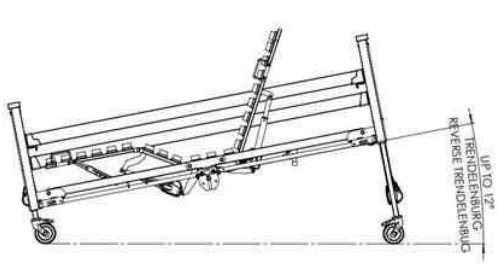

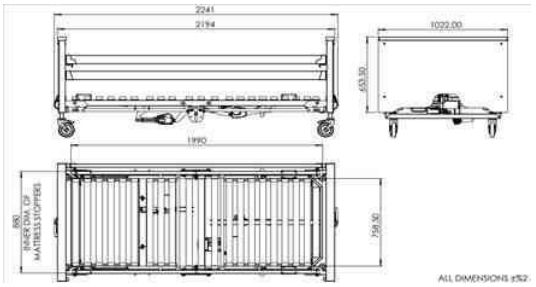

WHEEL DIAMETER IS 125 MM

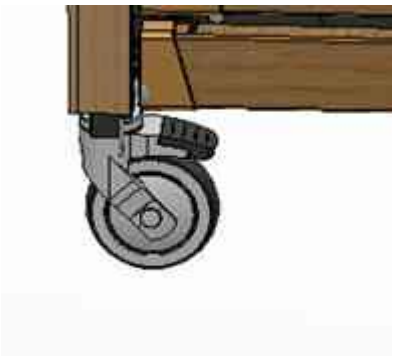

600026 MOTORIESD HOME CARE PATIENT BED TECHNICAL SPECIFICATIONS				
			Measure	Unit
A	BedFrameLength (OutsidetoOutside)		2241	mm
B	TiltSurfaceHeightAboveGround		Max. 750 - Min. 350	mm
C	BedFrameWidth (OutsidetoOutside)		1022	mm
D	Height of IV Pole	min.	1100	mm
		max.	1250	mm
α	BackAngle		0-75	°
β	CalfAngle		0-32	°
θ	FootAngle		0-12	°
	SafeLoadCapacity		175	Kg
	StaticCarryingCapacity		350	Kg
	Wheel Diameter		Ø125	mm
	TrendelenburgAngle		12	°
	Mattress		32	d

MAINTENANCE, REPAIR AND CLEANING INSTRUCTIONS

13.Maintenance andRepairPeriods

ATTENTION

Injurymayresultfromimpropermaintenance.

- ✓ Ifthemaintenancesupervisor is unsure, he/sheshouldseeksupportfromthemanufacturer.
- ✓ Takenecessarysafetyprecautionsbeforemaintenance.
- ✓ Do not usespareparts not recommendedbythemanufacturer.
- ✓ Do not performmaintenancewhilethebed is in functionalmovement.

NOTE: maintenancerecordsof patientbedsshould not be keptandtheseintervalsshould be made at certaintimes.

13.1 MonthlyMaintenance

- Checkthemovingparts of thepatientbed (back, height, trendelenburgmovement, etc.).
- Checkthejoiningelements (bolts, nuts, etc.)
- Checktheaccessoryslotsforanywearandtear.
- Checkthewheelsandtheirfunction.
- Checkthebrakesystem.
- Checkthesiderailmovementfunctions.

13.2 AnnualMaintenance

- Checkthejoints of themovementfunctions.
- Checkthebedframejoints.
- Checkthebrakesystemboltsandjoints.
- Checkthefunctions of thehydraulicpartsandcheckforanyleakageorleakage.
- Checkthewheelfunctionandcheckthewheelmountingbolts.
- Checkthesiderailingconnectionpointsandfasteners.

WARNING

- ✓ Malfunctionscausedbyerrors in useandsparepartsdemandareexcludedfromthescope of warranty.
- ✓ Maintenanceshould be carriedoutbytrainedhospitalstaff, ifanyproblemsareencountered, ourcompany'stechnical service unitshould be informed.
- ✓ Checkallboltsandtightenifnecessary
- ✓ Replacewornaccessories
- ✓ Do not replacewornmaterialswithfaultymaterials.

CAUTION: Thepatientbedmay be damagedbyimpropermaintenance.

Iftheauthorisedpersonnel of thehospitalareunsure, seekadvicefrom PEDIA PALS. Maintenanceshouldonly be carriedoutbyauthorised, trainedpersonnel.

Receivingsparepartsrequestsandinformation

14. Spare Parts

Malfunctionscausedbyerrors in useandsparepartsdemandareexcludedfromthescope of warranty.
Maintenanceshould be carriedoutbytrainedhospitalstaff, ifanyproblemsareencountered, ourcompany'stechnical service unitshould be informed.
Receivingsparepartsrequestsandinformation

- ✓ PEDIA PALS Technical service
- ✓ service@pediapals.com
- ✓ 1-888-733-4272

15. Cleaning / DisinfectingInstruction

15.1 Cleaning

- Usesuitabledetergentsforcleaning. The VOC values of thesedetergentsshould be at appropriatevaluesthatwill not harmtheenvironmentandpeople.
- Do not useabrasivepowders, steelwool, steelwirebrushesorabrasivespongesandcleaningagentsthatmaydamagetheproductsurfaces.
- Do not usedetergentswithsolventsthat can affectthestructureandconsistency of plastic (benzene, toluene, acetone, etc.)
- Cleanthestainlesssteelareas of theproductwithmaintenancespray, the pH value of thecleaningspray: 10.2.
- Thedensityvalue of themaintenancesprayshould be 0.855 g/cm³.
- Must be biodegradable.
- Thecleaningspraymust not contain AOX.

15.2. Disinfection

- ThedisinfectantDetrosept AF applied in thedisinfectionprocessmust be a fast-actingalcohol-basedsprayingandwipingdisinfectionproductthatdoes not containphenolandaldehyde.
- Disinfectinguse is appliedbysprayingtocompletelycoverthepre-cleanedmedicaldevice (spraydistance 30 cm). Foritseffectiveness, it should be keptfortheduration of microbiologicalactivityandtheproductshould be wipedbychoosing a sterile, non-particulatecloth.
- **Properties of thedisinfectedproduct;**
  - ✓ Effective in 1 minute (bactericidal, fungicidal, virucidal, tuberculosidal)
  - ✓ Aldehydeandphenolfree
  - ✓ Compatiblewithglass, ceramic, silicone, plastic (includingplexiglass), wood, aluminiumandstainlesssteelmaterials
  - ✓ Broadspectrum of action
  - ✓ 10% ethylalcohol, 20% propane 2-ol, 0,25% Didesylmethylpoly(oxyethyl) ammoniumpropionate, preservativeadditives, perfumedeionisedwater
  - ✓ didecylmethylpoly (oxyethyl) ammoniumpropinate, protective

- **Storage conditions of thedisinfectedproduct;**
  - ✓ Theexpirydatemust be 2 yearsfromthedate of production.
  - ✓ Keepthepackagingtightlyclosed in a well-ventilatedandwell-ventilatedplacebetween 0-25°.

Usedisinfectantwithspecialproperties.

WARNING:
Disinfectant is flammable. Keepawayfromsources of ignition. IrritantAvoidcontactwith skin andmucousmembranes. Incase of contactwith skin, rinsewithplenty of water.

16. TROUBLESHOOTING

PROBLEM	REASON	SOLUTION
BED ANY COMMAND NO ANSWER:	1. Theplug is not inserted in thesocket 2. Thepowercable is not working. 3. Thecontrolbox is not working. 4. Hand Control Not Working	1. Insertthepluginthesocket. 2. Replacethepowercable. 3. Sendthecontrolboxforrepair 4. Sendthehandcontrolto service
ENGINE DOES NOT START WHILE THE SYSTEM IS RUNNING	1. Engine malfunction 2. Hand Control Malfunction	1. The motor needsto be replaced, callthe service centre. 2. Sendthehandcontrolto service
THE ENGINE DOES NOT START WHEN THE SYSTEM IS RUNNING, FROM THE CONTROL BOX '' CLICK ''' IF THERE IS NO SOUND:	1. Control boxdefective 2. Theremote is faulty	1. Control Box needsto be replaced, call service 2. Theremoteneedsto be replaced. Call the service centre.

17. SAFE STORAGE OF THE PATIENT BED

Topreventdamagetothepatientbedduringstorage;

- ✓ Wrap thePowercablearoundthecablehook on thepatientbed.
- ✓ Removethepatientbedaccessoriesandpositionthemhorizontally on thebed.
- ✓ Pack thepatientbedsothattherearenomovingpartsduetoinvoluntaryshaking.
- ✓ Keeptheheight of thepatientbedto a minimum
- ✓ Adjusttheposition of thepatientbedsothat it is level.
- ✓ Switch thebrakestotheoffposition.
- ✓ Do not placethebedunderloadduringstorage.
- ✓ Wrap electricalsystemswithprotectivepackagingmaterials.

18. ENVIRONMENT

18.1 EnvironmentalProtection

PEDIA PALS carriesthe idea of takinggreatsteps in protectingtheenvironmentbythinkingaboutfuturegenerations. Thematerials of thisproductareenvironmentallycompatible. Itdoes not containhazardoussubstances. Attentionshould be paidtothesymbolsandsigns as information is providedwiththesymbolsandsignsused. Theproductusesrecycledsteel, electricalcomponents, packagingmaterials, plasticsandwoodmaterials.

Themaximumacousticnoiseleveltotheenvironmentwhenthepatientbed is in operation is **60 dB**.

- Defectiveelectricalmaterialsmust be returnedtothemanufacturerwithoutbeingdiscarded.
- Return thepackagingmaterialstothemanufactureror a licensedrecyclingcompany.
- Return theuseddefectiveplasticmaterialstothelicensedrecyclingcompanyorthemanufacturer.

NOTE: Fornecessaryinformation, supportshould be obtainedfromourafter-sales service unit.

19. WARRANTY

PEDIA PALS shallonly be heldresponsibleforregularservicingandproductreliability.

Thisproduct is coveredby a **24-month** warrantyfromthedate of purchase. Defectscausedbyproductionandassemblydefectsarefree of charge. Defectscausedbyusageerrorsare not coveredbythewarranty. Product use is determinedwithintheframework of thetermsandconditionsdeterminedbythestandard.

20. CONTACT

MANUFACTURING COMPANY

BRAND: PEDIA PALS

ADDRESS: 230 Grider St. Buffalo, NY 14215 USA

PHONE NO: 1-888-733-4272

E-MAİL: sales@pediapals.com

TYPE: Hospital Furnishings And Equipment For Medical Purposes

MODEL: 600026

LIFE OF USE: 10 YEARS

SERVICE STATION: Pedia Pals